STGF17NC60SD

17 A, 600 V fast IGBT with Ultrafast diode

Datasheet — production data

Features

- Very low on-voltage drop ($V_{CE(sat)}$)
- Minimum power losses at 5 kHz in hard switching
- Optimized performance for medium operating frequencies
- IGBT co-packaged with Ultrafast freewheeling diode

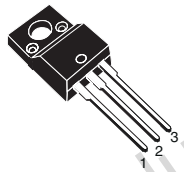

TO-220FP

Application

Electronic light dimmer

Description

This high voltage and fast IGBT shows an excellent compromise between low conduction loss and fast switching performance. It is designed in PowerMESH™ technology combined with Ultrafast diode.

Figure 1. Internal schematic diagram

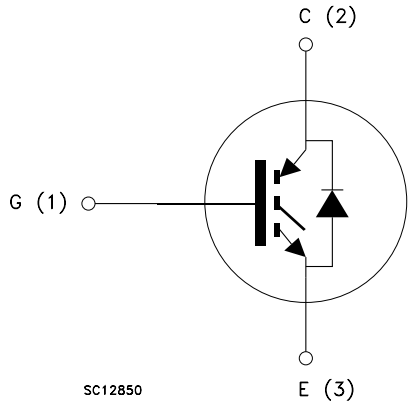

Table 1. Device summary

Order code	Marking	Package	Packaging
STGF17NC60SD	GF17NC60SD	TO-220FP	Tube

Obsolete Product(s) - Obsolete Product(s)

This is information on a product in full production. www.st.com

1 Electrical ratings

Table 2. Absolute maximum ratings

Symbol	Parameter	Value	Unit
V_{CES}	Collector-emitter voltage (V_{GE} = 0)	600	V
I_C (1)	Continuous collector current at T_C = 25°C	17	A
I_C (1)	Continuous collector current at T_C = 100°C	11	A
I_{CP} (2)	Pulsed collector current	80	A
I_{CL} (3)	Turn-off latching current	80	A
I_F	Diode RMS forward current at T_C = 25°C	20	A
I_{FSM}	Surge non repetitive forward current t_p = 10 ms sinusoidal	50	A
V_{GE}	Gate-emitter voltage	±20	V
V_{ISO}	Insulation withstand voltage (RMS) from all three leads to external heat sink (t = 1 s; T_C = 25°C)	2500	V
P_{TOT}	Total dissipation at T_C = 25°C	32	W
T_j	Operating junction temperature	- 55 to 150	°C

1. Calculated according to the iterative formula

$$I_C(T_C) = \frac{T_{j(max)} - T_C}{R_{thj-c} \times V_{CE(sat)(max)}(T_{j(max)}, I_C(T_C))}$$

2. Pulse width limited by maximum junction temperature and turn-off within RBSOA
3. Vclamp = 80% of V_{CES}, T_j = 150 °C, R_G = 10 Ω, V_{GE} = 15 V

Table 3. Thermal data

Symbol	Parameter	Value	Unit
R_{thj-c}	Thermal resistance junction-case IGBT	3.9	°C/W
	Thermal resistance junction-case diode	5.5	°C/W
R_{thj-a}	Thermal resistance junction-ambient	62.5	°C/W

Obsolete Product(s) - Obsolete Product(s)

2 Electrical characteristics

T_j = 25°C unless otherwise specified.

Table 4. Static

Symbol	Parameter	Test conditions	Min.	Typ.	Max.	Unit
$V_{(BR)CES}$	Collector-emitter breakdown voltage (V_{GE}= 0)	I_C = 1 mA	600			V
$V_{CE(sat)}$	Collector-emitter saturation voltage	V_{GE} = 15 V, I_C = 12 A V_{GE} = 15 V, I_C = 12 A, T_j =125°C		1.55 1.35	1.9	V V
$V_{GE(th)}$	Gate threshold voltage	V_{CE} = V_{GE}, I_C = 250 µA	4.2		6.2	V
I_{CES}	Collector cut-off current (V_{GE} = 0)	V_{CE} = 600 V V_{CE} = 600 V, T_j =125°C			150 1	µA mA
I_{GES}	Gate-emitter leakage current (V_{CE} = 0)	V_{GE} = ±20 V, V_{CE} = 0			±100	nA
g_{fs}	Forward transconductance	V_{CE} = 15 V, I_C = 12 A		10		S

Table 5. Dynamic

Symbol	Parameter	Test conditions	Min.	Typ.	Max.	Unit
C_{ies} C_{oes} C_{res}	Input capacitance Output capacitance Reverse transfer capacitance	V_{CE} = 25 V, f = 1 MHz, V_{GE} = 0	-	1190 135 28.5	-	pF pF pF
Q_g Q_{ge} Q_{gc}	Total gate charge Gate-emitter charge Gate-collector charge	V_{CE} = 480 V, I_C = 12 A, V_{GE} = 15 V, *Figure 3*	-	54.5 8.7 25.8	-	nC nC nC

Table 6. Switching on/off (inductive load)

Symbol	Parameter	Test conditions	Min.	Typ.	Max.	Unit
$t_{d(on)}$ t_r (di/dt)on	Turn-on delay time Current rise time Turn-on current slope	V_{CC} = 480 V, I_C = 12 A R_G = 10 Ω, V_{GE} = 15 V, *Figure 4*	-	17.5 6.2 1870	-	ns ns A/µs
$t_{d(on)}$ t_r (di/dt)on	Turn-on delay time Current rise time Turn-on current slope	V_{CC} = 480 V, I_C = 12 A R_G = 10 Ω, V_{GE}= 15 V, T_j = 125°C, *Figure 4*	-	17 6.5 1700	-	ns ns A/µs
$t_{r(Voff)}$ $t_{d(Voff)}$ t_f	Off voltage rise time Turn-off delay time Current fall time	V_{CC} = 480 V, I_C = 12 A R_G = 10 Ω, V_{GE} = 15 V, *Figure 4*	-	90 175 215	-	ns ns ns
$t_{r(Voff)}$ $t_{d(Voff)}$ t_f	Off voltage rise time Turn-off delay time Current fall time	V_{CC} = 480 V, I_C = 12 A R_G = 10 Ω, V_{GE} = 15 V, T_j = 125°C, *Figure 4*	-	155 245 290	-	ns ns ns

Obsolete Product(s) - Obsolete Product(s)

Table 7. Switching energy (inductive load)

Symbol	Parameter	Test conditions	Min.	Typ.	Max.	Unit
E_{on} E_{off}(1) E_{ts}	Turn-on switching losses Turn-off switching losses Total switching losses	V_{CC} = 480 V, I_C = 12 A R_G= 10 Ω, V_{GE}= 15 V, *Figure 2*	-	135 815 995	-	µJ µJ µJ
E_{on} E_{off}(1) E_{ts}	Turn-on switching losses Turn-off switching losses Total switching losses	V_{CC} = 480 V, I_C = 12 A R_G= 10 Ω, V_{GE}= 15 V, T_j = 125 °C, *Figure 2*	-	200 1175 1375	-	µJ µJ µJ

1. Turn-off losses include also the tail of the collector current

Table 8. Collector-emitter diode

Symbol	Parameter	Test conditions	Min.	Typ.	Max.	Unit
V_F	Forward on-voltage	I_F = 12 A I_F = 12 A, T_j = 125 °C		2.3 2.0		V V
t_{rr} Q_{rr} I_{rrm}	Reverse recovery time Reverse recovery charge Reverse recovery current	I_F = 12 A, V_R =40 V, di/dt=100 A/µs, *Figure 5*		31 29.5 1.9		ns nC A
t_{rr} Q_{rr} I_{rrm}	Reverse recovery time Reverse recovery charge Reverse recovery current	I_F = 12 A, V_R =40 V, di/dt=100 A/µs, T_j = 125 °C *Figure 5*		48.5 70.5 3		ns nC A

Obsolete Product(s) - Obsolete Product(s)

3 Test circuits

Figure 2. Test circuit for inductive load switching

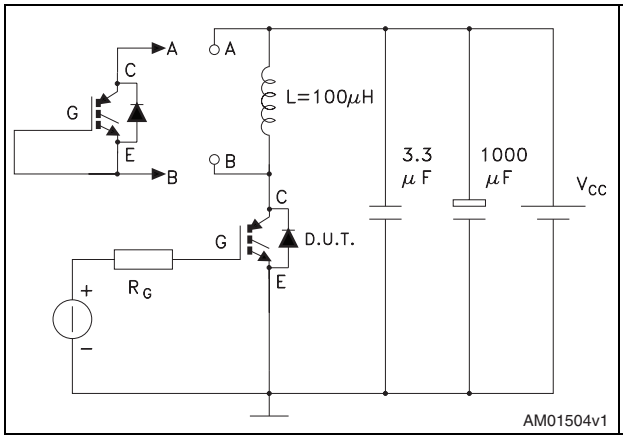

Figure 3. Gate charge test circuit

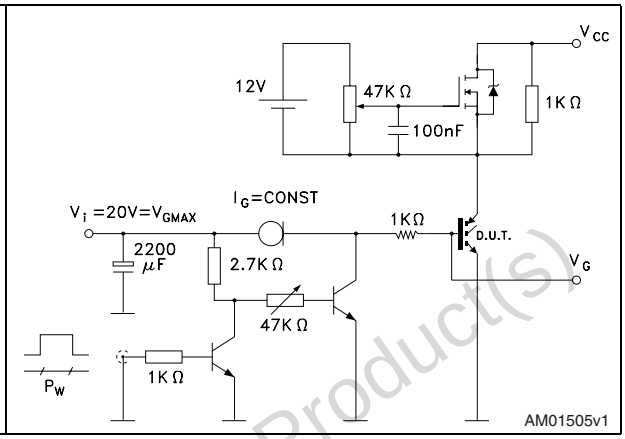

Figure 4. Switching waveform

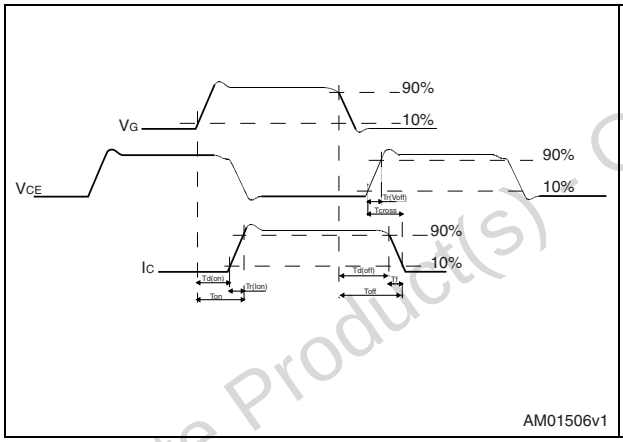

Figure 5. Diode recovery time waveform

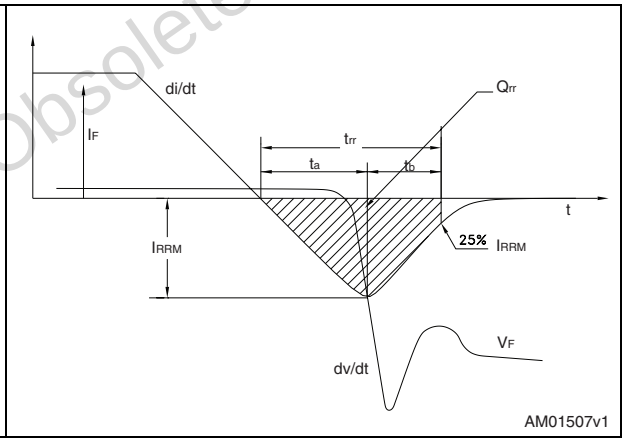

Obsolete Product(s) Obsolete Product(s)

4 Package mechanical data

In order to meet environmental requirements, ST offers these devices in different grades of ECOPACK® packages, depending on their level of environmental compliance. ECOPACK® specifications, grade definitions and product status are available at: www.st.com. ECOPACK is an ST trademark.

Obsolete Product(s) - Obsolete Product(s)

Table 9. TO-220FP mechanical data

Dim.	mm		
	Min.	Typ.	Max.
A	4.4		4.6
B	2.5		2.7
D	2.5		2.75
E	0.45		0.7
F	0.75		1
F1	1.15		1.70
F2	1.15		1.70
G	4.95		5.2
G1	2.4		2.7
H	10		10.4
L2		16	
L3	28.6		30.6
L4	9.8		10.6
L5	2.9		3.6
L6	15.9		16.4
L7	9		9.3
Dia	3		3.2

Figure 6. TO-220FP drawing

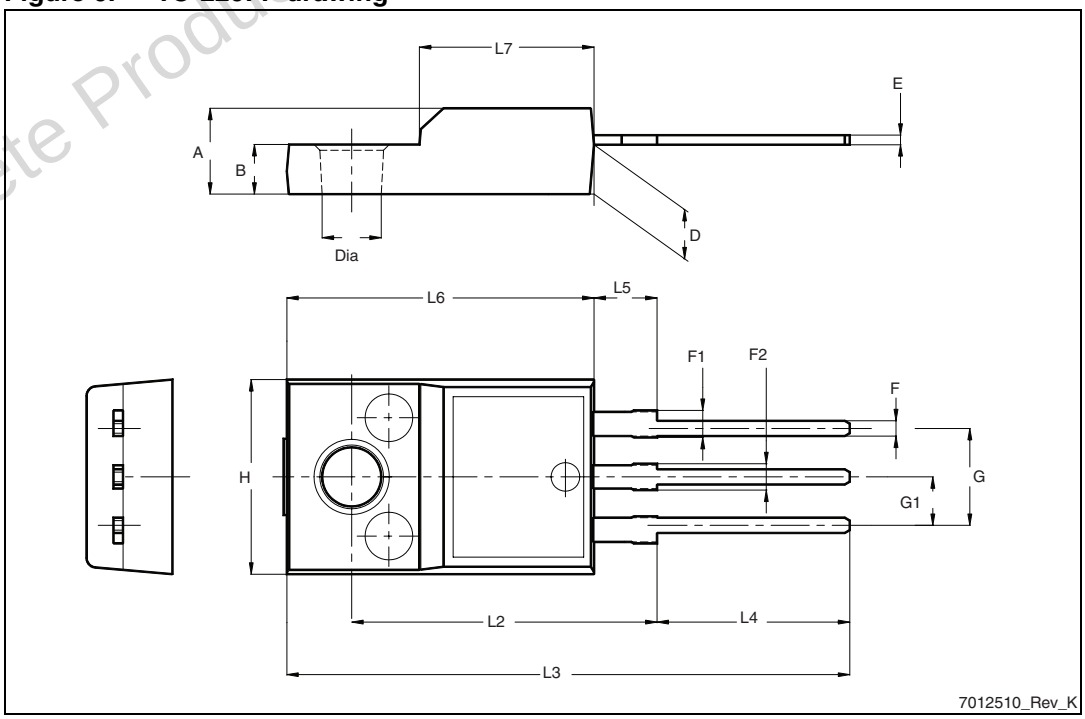

Obsolete Product(s) - Obsolete Product(s)

5 Revision history

Table 10. Document revision history

Date	Revision	Changes
14-Nov-2012	1	First release

Obsolete Product(s) - Obsolete Product(s)

Please Read Carefully:

Information in this document is provided solely in connection with ST products. STMicroelectronics NV and its subsidiaries (“ST”) reserve the right to make changes, corrections, modifications or improvements, to this document, and the products and services described herein at any time, without notice.

All ST products are sold pursuant to ST’s terms and conditions of sale.

Purchasers are solely responsible for the choice, selection and use of the ST products and services described herein, and ST assumes no liability whatsoever relating to the choice, selection or use of the ST products and services described herein.

No license, express or implied, by estoppel or otherwise, to any intellectual property rights is granted under this document. If any part of this document refers to any third party products or services it shall not be deemed a license grant by ST for the use of such third party products or services, or any intellectual property contained therein or considered as a warranty covering the use in any manner whatsoever of such third party products or services or any intellectual property contained therein.

UNLESS OTHERWISE SET FORTH IN ST’S TERMS AND CONDITIONS OF SALE ST DISCLAIMS ANY EXPRESS OR IMPLIED WARRANTY WITH RESPECT TO THE USE AND/OR SALE OF ST PRODUCTS INCLUDING WITHOUT LIMITATION IMPLIED WARRANTIES OF MERCHANTABILITY, FITNESS FOR A PARTICULAR PURPOSE (AND THEIR EQUIVALENTS UNDER THE LAWS OF ANY JURISDICTION), OR INFRINGEMENT OF ANY PATENT, COPYRIGHT OR OTHER INTELLECTUAL PROPERTY RIGHT.

UNLESS EXPRESSLY APPROVED IN WRITING BY TWO AUTHORIZED ST REPRESENTATIVES, ST PRODUCTS ARE NOT RECOMMENDED, AUTHORIZED OR WARRANTED FOR USE IN MILITARY, AIR CRAFT, SPACE, LIFE SAVING, OR LIFE SUSTAINING APPLICATIONS, NOR IN PRODUCTS OR SYSTEMS WHERE FAILURE OR MALFUNCTION MAY RESULT IN PERSONAL INJURY, DEATH, OR SEVERE PROPERTY OR ENVIRONMENTAL DAMAGE. ST PRODUCTS WHICH ARE NOT SPECIFIED AS "AUTOMOTIVE GRADE" MAY ONLY BE USED IN AUTOMOTIVE APPLICATIONS AT USER’S OWN RISK.

Resale of ST products with provisions different from the statements and/or technical features set forth in this document shall immediately void any warranty granted by ST for the ST product or service described herein and shall not create or extend in any manner whatsoever, any liability of ST.

ST and the ST logo are trademarks or registered trademarks of ST in various countries.

Information in this document supersedes and replaces all information previously supplied.

The ST logo is a registered trademark of STMicroelectronics. All other names are the property of their respective owners.

© 2012 STMicroelectronics - All rights reserved

STMicroelectronics group of companies

Australia - Belgium - Brazil - Canada - China - Czech Republic - Finland - France - Germany - Hong Kong - India - Israel - Italy - Japan - Malaysia - Malta - Morocco - Philippines - Singapore - Spain - Sweden - Switzerland - United Kingdom - United States of America

www.st.com

Obsolete Product(s) - Obsolete Product(s)